BODY, FLOOR PANELS, REAR - Z26S4D92AN/AH/BN/BH (C750173)

2026 RZR - RZR PRO S4 ULTIMATE (R01) - Z26S4D92AN/AH/BN/BH

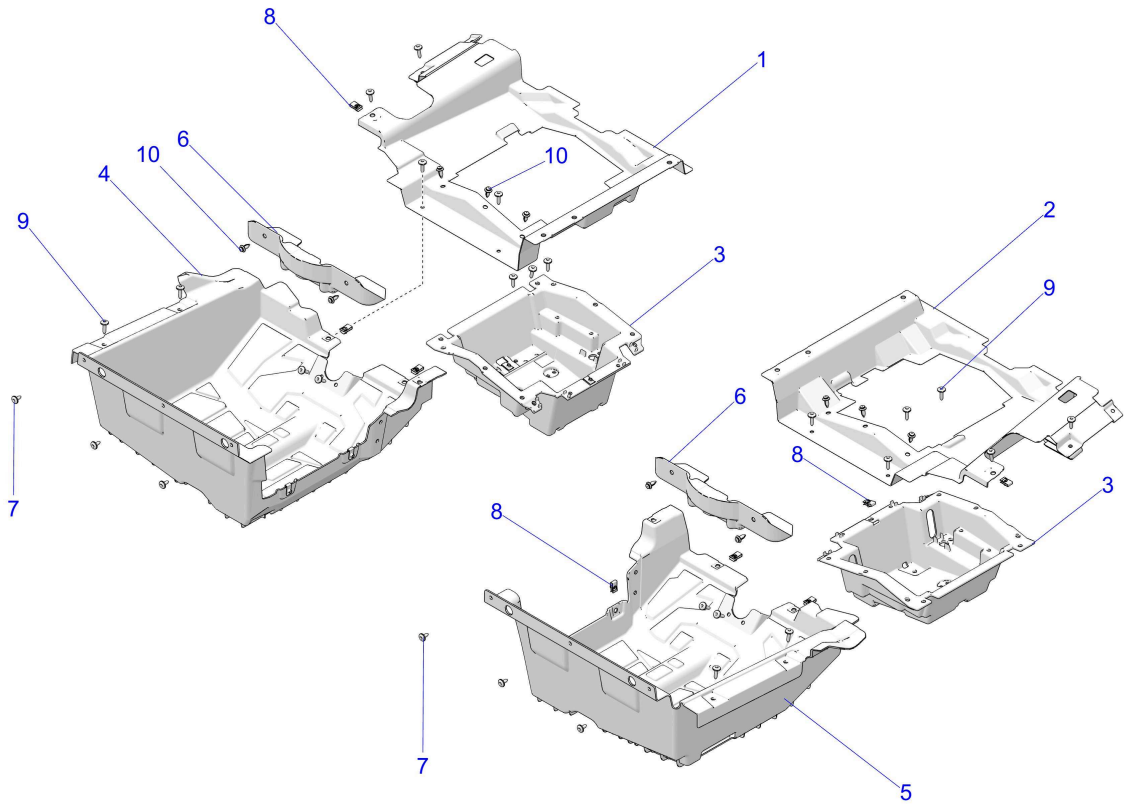

© 2023 Polaris Industries Inc.

C750173

Reference #	*Part#*	*Description*	*Quantity*
1	5456321-070	PANEL-UNDERSEAT,LH,BLK	1
2	5456322-070	PANEL-UNDERSEAT,RH,BLK	1
3	5455709-070	TRAY-BATTERY,BLK,MP	2
4	5455851-070	FLOOR-REAR,LH,BLK	1
5	5455852-070	FLOOR-REAR,RH,BLK	1
6	5456054-070	COVER-FRONT SEAT WELDMENT,BLK	2
7	7518936	SCR-M6X1X16 TR/TX-M	6
8	7081305	CLIP-U SPEED NUT	AR
9	7519650	SCR-TXTH-M6X1.0X25 ZFB	AR
10	7661855	RIVET-TUFLOK,.315-.325X.787	AR

Copyright 1996-2026 Polaris Industries U.S.A All rights reserved.